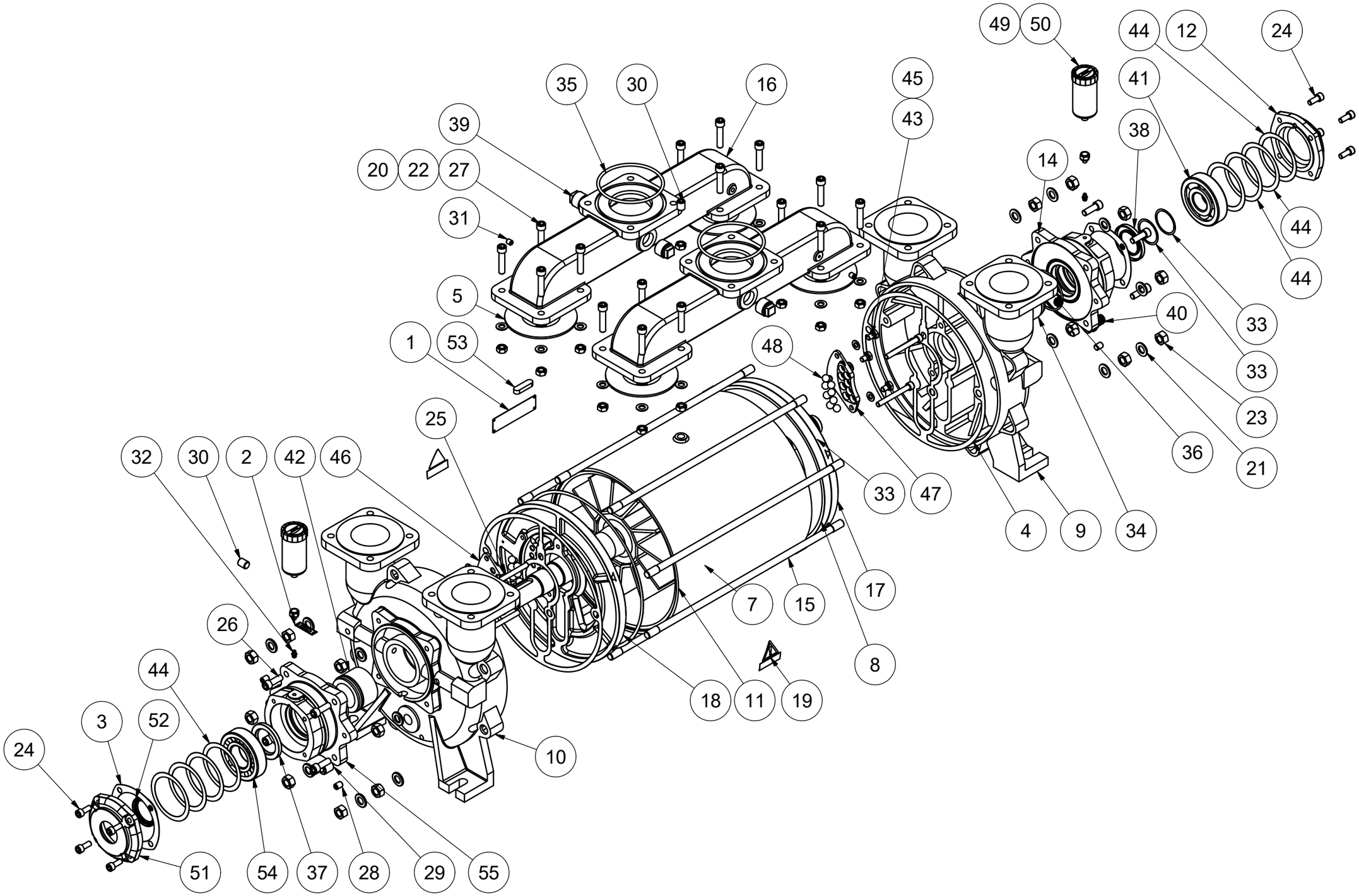

DOC1627308_1