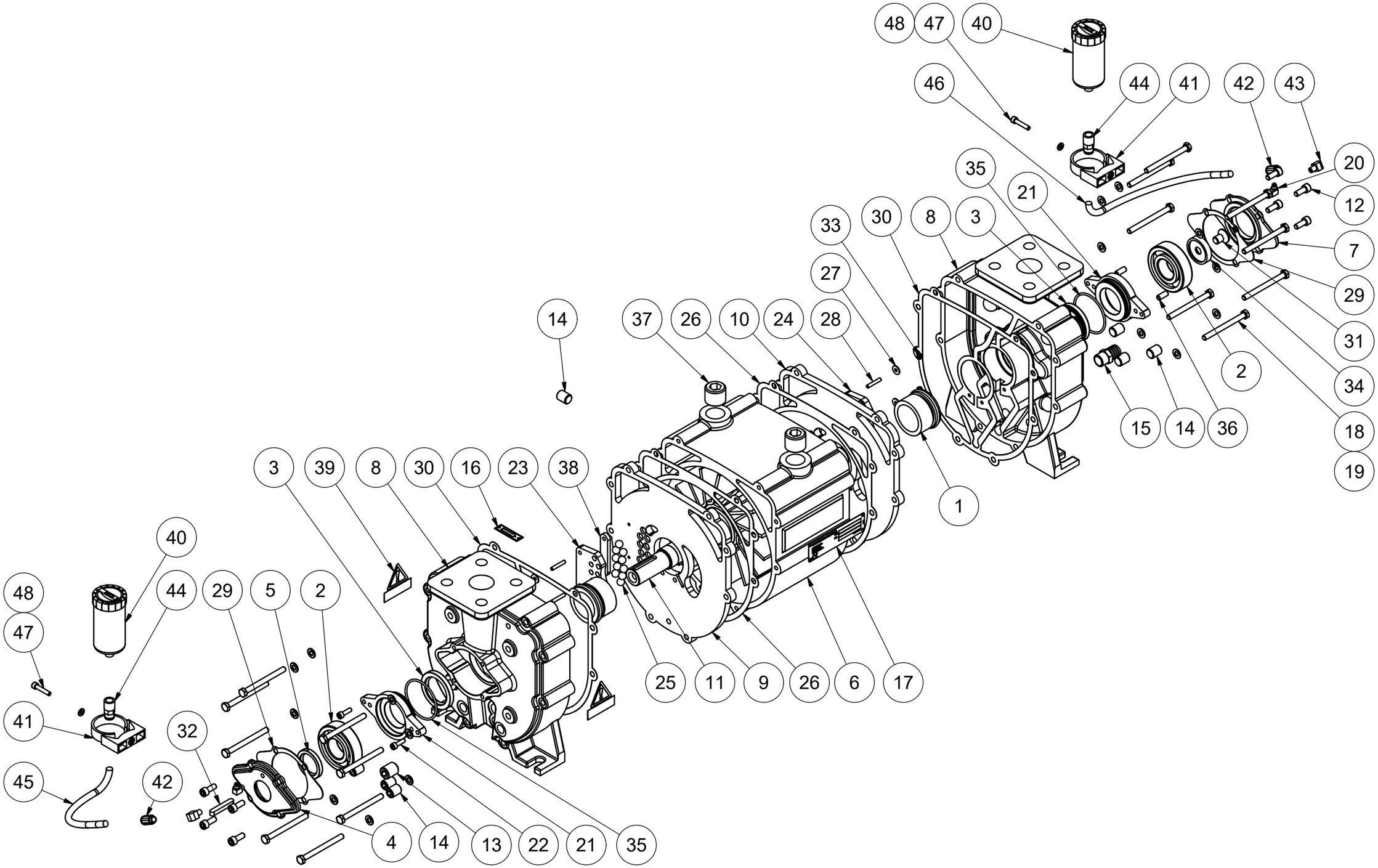

DOC1627340_1