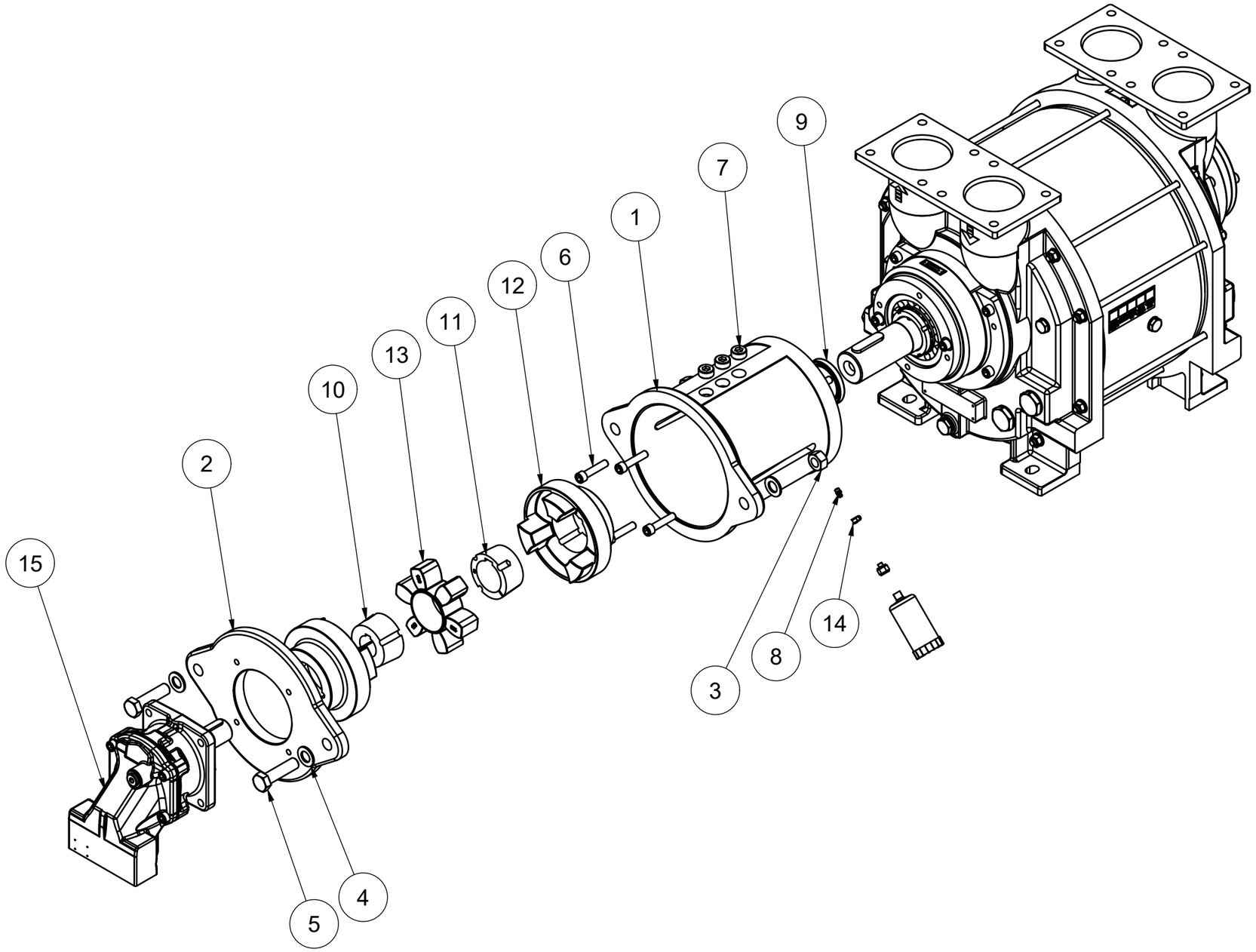

DOC1634815_1