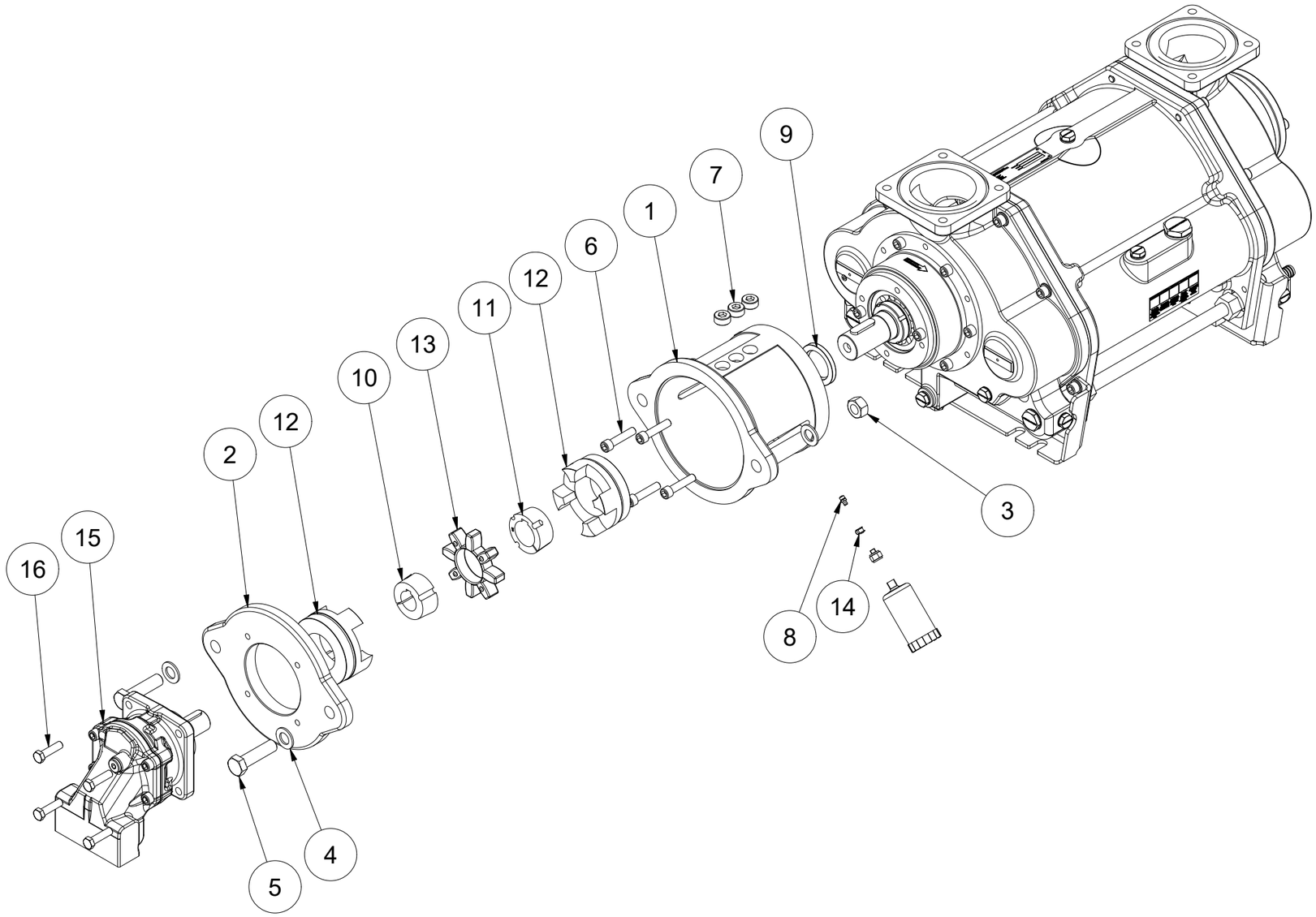

DOC1634818_1